DIYA

ALL IN ONE SOLAR STREET LIGHT

80W I 15,800lm



www.auroraslighting.com

AURORAS

Excellence in Sustainable Energy

AURORAS

Excellence in Sustainable Energy





DIYA

ALL IN ONE SOLAR STREET LIGHT

DIYA is an all-in-one solar street light designed for a wide range of outdoor applications, including roads, industrial areas, and public spaces. With power options from 60W to 200W, it supports pole heights from 6 to 15 meters, delivering reliable and uniform illumination for different project requirements.

DIYA features adjustable LED modules for precise light distribution, combined with a high-efficiency solar panel and a large-capacity $LiFePO_4$ battery to ensure stable performance and long operating autonomy. The integrated structure allows easy installation and maintenance, while compatibility with smart wireless control systems enables remote monitoring and flexible lighting management.

DIYA 80W

ALL IN ONE SOLAR STREET LIGHT

AURORAS
Excellence in Sustainable Energy



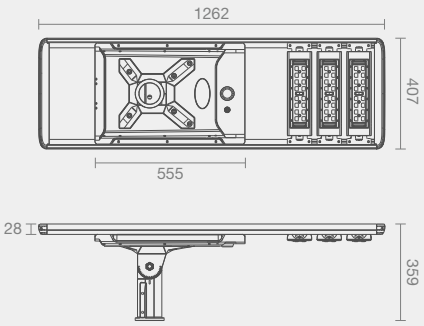

LED LIGHT	Luminous Flux	15,800lm	LED Lifetime	>100,000 hours
	LED Power	80W	CRI	Ra≥70
	Luminous Efficiency	200lm/W	CCT	2200K~6000K
	LED Chips	SMD5050 48pcs 5W/LED max	Working Temp.	-15°C ~ +65°C
SOLAR PANEL	Peak Power	103Wp	Operating Temperature	-40 °C ~ 85 °C
	Max. Voltage	18V	Lifetime	>20 years
	Solar cells efficiency	23.5%	Cable Size & Connector	2.5mm Universal MC4
	Power Tolerance (W)	±3%	Glass	High-strength tempered glass
	Technology	Monocrystalline silicon panel	-	-
LIFEPO4 BATTERY	Battery type	LiFePO4 6000mA 3.2V 32700	Cycle Life	4000 cycles @ D.O.D 50%
	Battery capacity	48Ah 614Wh	Working Temp.	0°C ~ +60°C
	Voltage	12.8V	-	-
MPPT CONTROLLER	System Voltage	12V	Tracking Efficiency	98%
	Load Power	80W	Motion Sensor	PIR / Microwave Optional
	Charge Current	10A	-	-
OTHER	Light Dimension	1262*407*359mm	Certification	CB, ROHS, CE
	Pole Diameter	76mm	CTN SIZE	-
	IP&IK Protection	IP65 IK08	N.W	24.04KG
	Material	Aluminum Alloy	Warranty	5 Years
	Color	Grey / Black / Customized	-	-

Copyright © www.auroraslighting.com. All rights reserved. Specifications are of an indicative nature and subject to change without notice



High Efficiency LED

SMD5050 5W/LED max

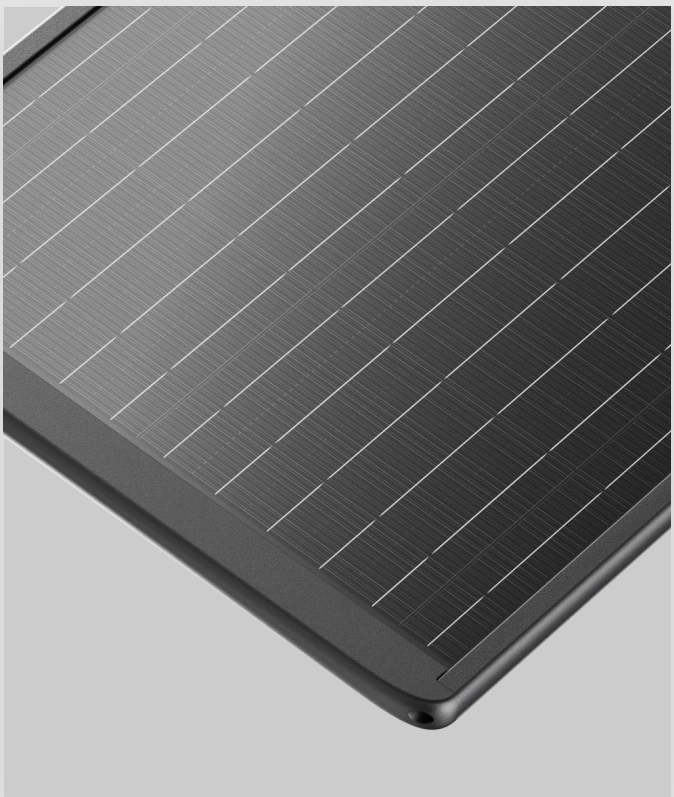

High Efficiency

Solar Panel

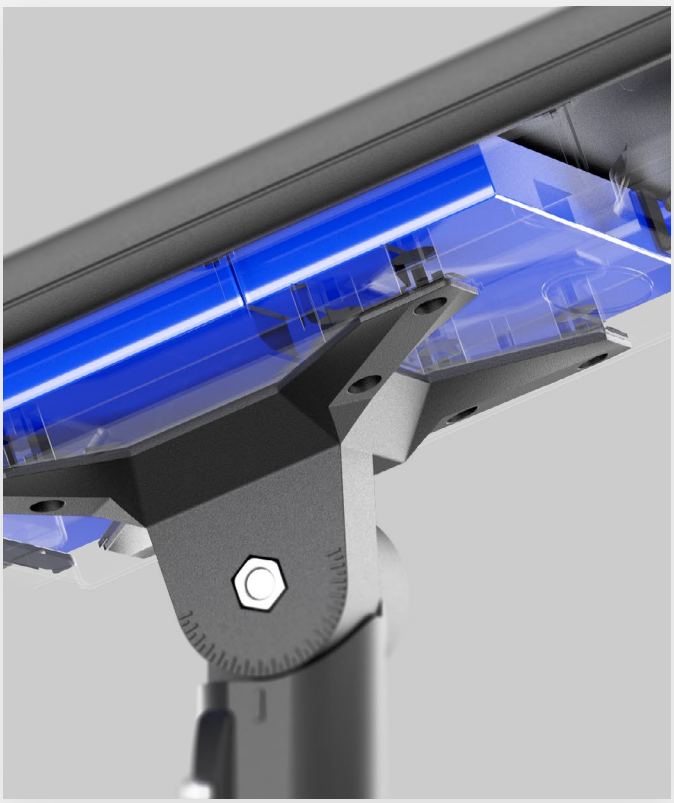

Built-in Large-capacity

LiFePO4 Battery



Adjustable
LED Module



Aluminum Alloy
IP66 Battery Enclose



Infrared / Microwave
Motion Sensors

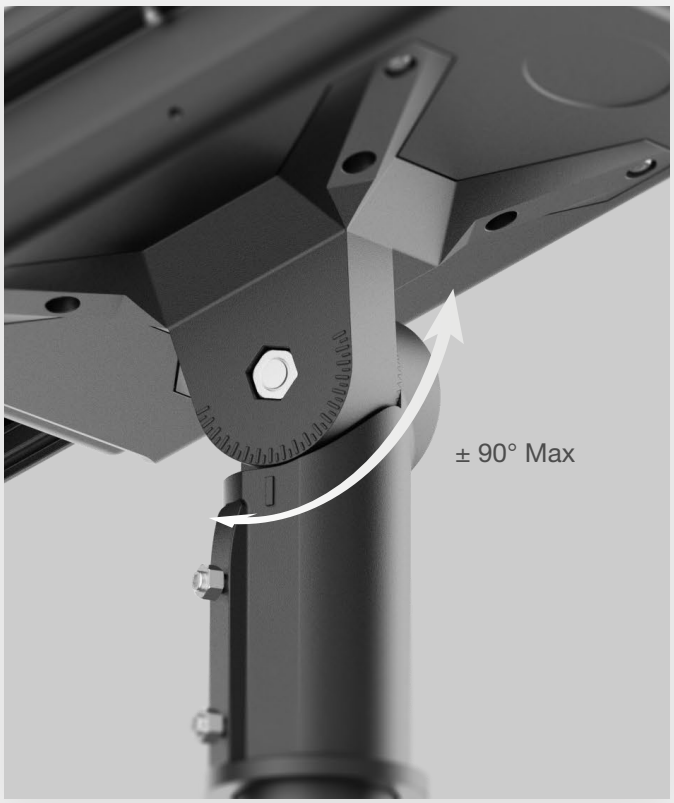

Adjustable
Mounting Bracket

Ultra Slim LED Optic

Optics play a critical role in solar street lighting performance. The luminaire is equipped with specially designed LED optics that precisely direct light onto the roadway, minimizing light loss outside the target area. Its ultra-narrow and extended light distribution ensures smooth, uniform illumination with no dark spots between poles, delivering high brightness over longer distances and enabling wider pole spacing, which effectively reduces overall project costs.

Lens Material	Light Utilization	Protection
PMMA	≥93%	Anti-UV, Anti-yellowing



Light Distribution Curve

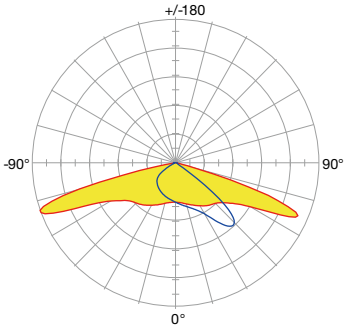



Luminaire

C0/C180: C90/C270:

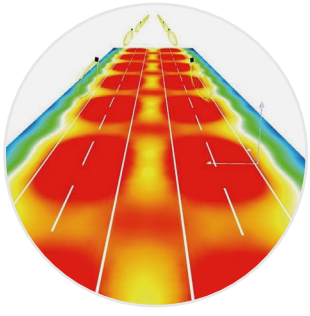

Installation Method



Lighting Working Mode

In addition to automatic switching on and off , you have the possibility of setting different lighting program easily by the simple remote control according to the needs of the project. Also you can set the light to work for 6 hours or 12 hours.

Mode A	1H 100% full power	4H/30%(sensor 100%)	9H/20%(sensor 50%)
Mode B	14H/30%(sensor 100%) + 1H/Morning function		
Mode C	14H/30%(without sensor) + 1H/Morning function		

Applications



Street, Road



Bike Track, Pathway



Residential, Villa



Public Area, Park, Car Parking Lot



Jetties, Coastal, Marina, Dock



Farms, Fences, etc

AURORAS
Excellence in Sustainable Energy

Hybrid System with 220V Grid Supply (Optional)

The solar streetlight features a hybrid system with AC grid backup, ensuring reliable operation in areas with limited solar radiation or prolonged bad weather. The intelligent control system automatically switches to grid power when battery energy is low and returns to battery operation once fully recharged, guaranteeing continuous, uninterrupted lighting throughout the year.



High reliability
Dual power supply guarantee, no risk of lighting interruption.

Energy saving
Give priority to the use of clean energy to reduce carbon emissions.

More economical
Reduce power consumption and low long-term use cost.

Flexible installation
Suitable for areas where solar energy resources are unstable or require high brightness.

AURORAS

Excellence in Sustainable Energy



Zhaga Book 18 socket
with D4i protocol

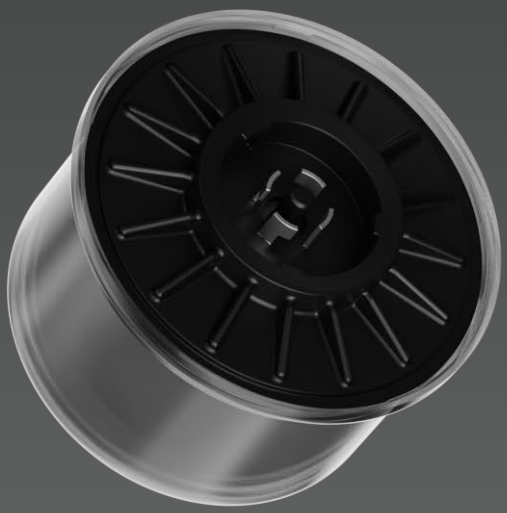

Zhaga-D4i Smart Interface (Optional)

Supports a Zhaga Book 18 socket with the standardized D4i protocol, enabling true plug-and-play integration of smart sensors, communication nodes, and IoT controllers. By adopting the open D4i standard, modules from different manufacturers can be installed on the same interface and communicate seamlessly with the luminaire.

Unlike many solar lighting systems that use Zhaga sockets with proprietary protocols, the Zhaga-D4i interface ensures broad compatibility and avoids vendor lock-in. Users can freely select third-party smart modules and integrate the lighting system into various smart city platforms, providing greater flexibility, easier maintenance, and long-term upgradeability.

Open Standard Interface

Zhaga Book 18 with D4i ensures compatibility with modules from different manufacturers.

No Vendor Lock-in

Supports third-party modules without relying on a single supplier or platform.

Plug-and-Play Upgrade

Smart sensors and communication nodes can be easily installed or replaced.

Smart City Ready

Enables seamless integration with IoT lighting control systems.

IoT Smart Control Solutions (Optional)

Our solar street lights can be seamlessly integrated with advanced IoT communication modules, allowing each street light to automatically report key data such as operating status, battery health and solar power generation, while supporting remote switching, adaptive dimming and instant fault diagnosis.

Single light control

Wireless Network

Malfunction management

Energy consumption analysis

Intelligent monitoring

LoRaWAN®

SMART CONTROL SOLUTION

Advantages

Ultra-low power consumption, ultra-long distance

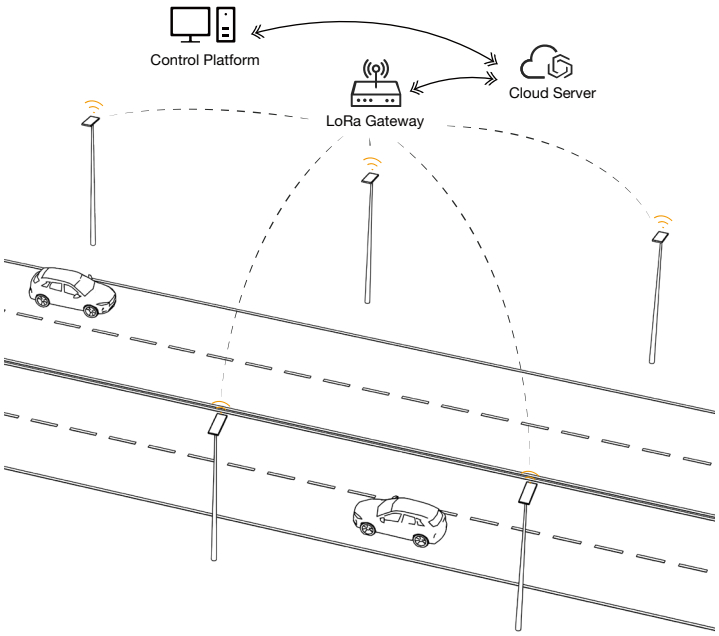

4G Wireless

SMART CONTROL SOLUTION

Advantages

Fast speed, no gateway required, Ultra long distance, High connection stability

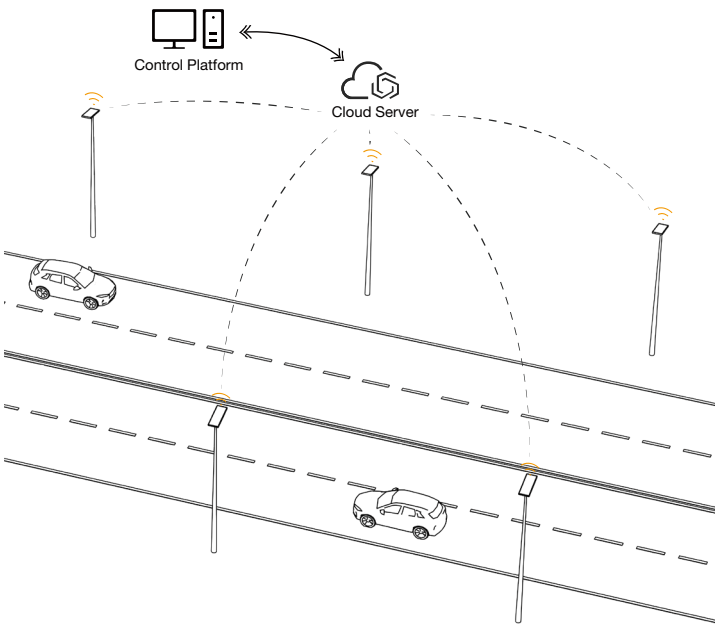

AURORAS

Excellence in Sustainable Energy

AURORAS INNOTECH
GUANGDONG CO., LTD.

www.auroraslighting.com

+86 180 2307 5361

+86 0756-8530887

sales@auroraslighting.com

Headquarter :
903# Block A, Gree Innovation City,
Zhuhai 519000 CHINA

Factory in China :
2~4/F, B# Bldg, 1# Dongcheng Rd, SanXiang,
Zhongshan, GuangDong 528463 CHINA

2/F 617# HuaYu Rd, XiangZhou District,
Zhuhai, GuangDong 519000 CHINA

Factory in Saudi :
Street 59# Al-Kharj Industrial City,
Riyadh SAUDI ARABIA

ISO BSCI CB CE RoHS DARKSKY APPROVED

Join in Our Channel